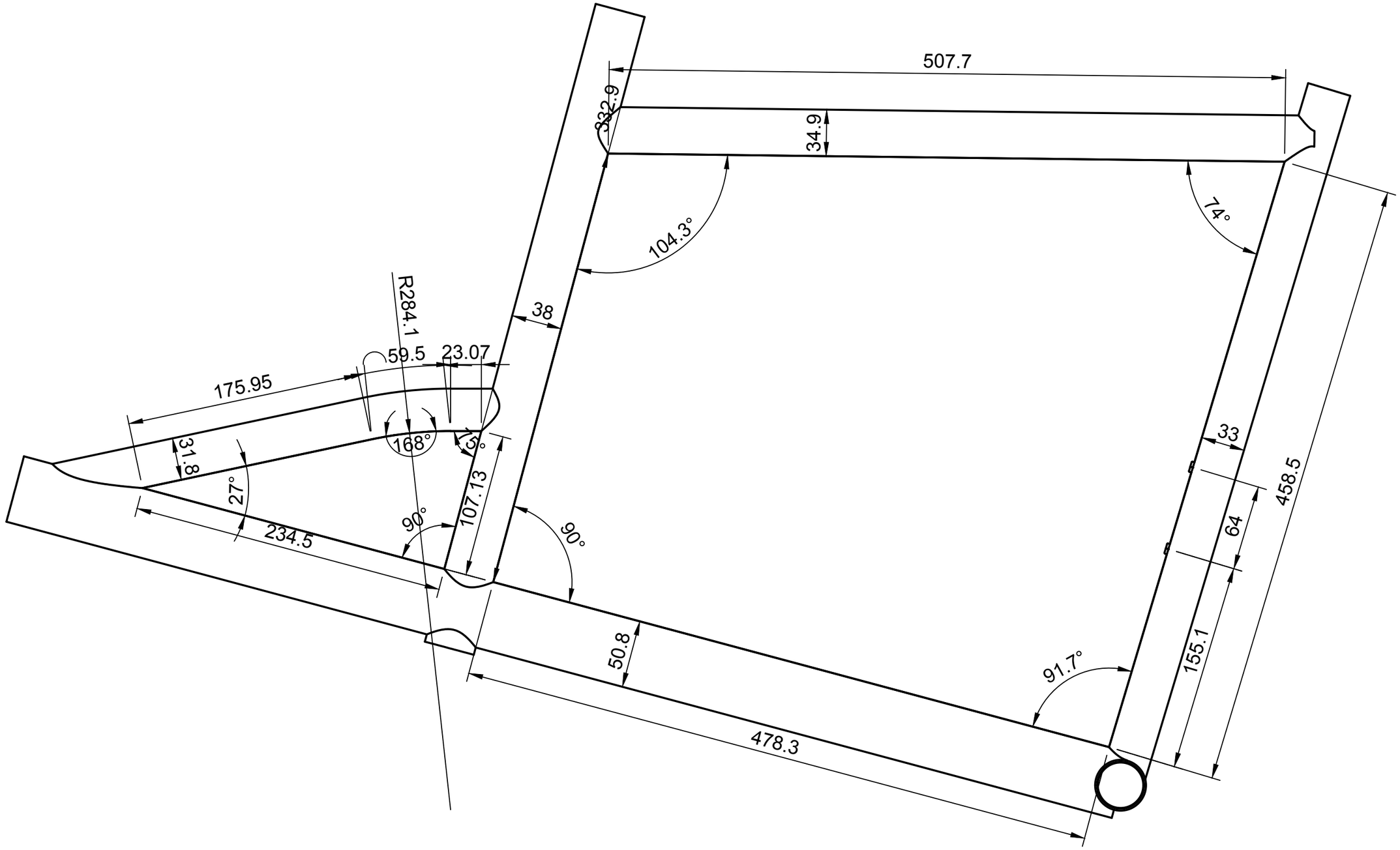

WARNING!

Ensure clearance for rack mounting plate, logo placement on frame, and cable guides. It's best practice to have a physical frame available during design .

Bagmaker Template

Model: Cargo V3

Size: Medium

OMNIUM